8" INLET FLANGE
1/2" PLATE, 13 1/2" O.D.
(8) 7/8" DIA. HOLES
ON 11 3/4" B.C. STRADDLE C.L.

8" OUTLET FLANGE
1/2" PLATE, 13 1/2" O.D.
(8) 7/8" DIA. HOLES
ON 11 3/4" B.C. STRADDLE C.L.

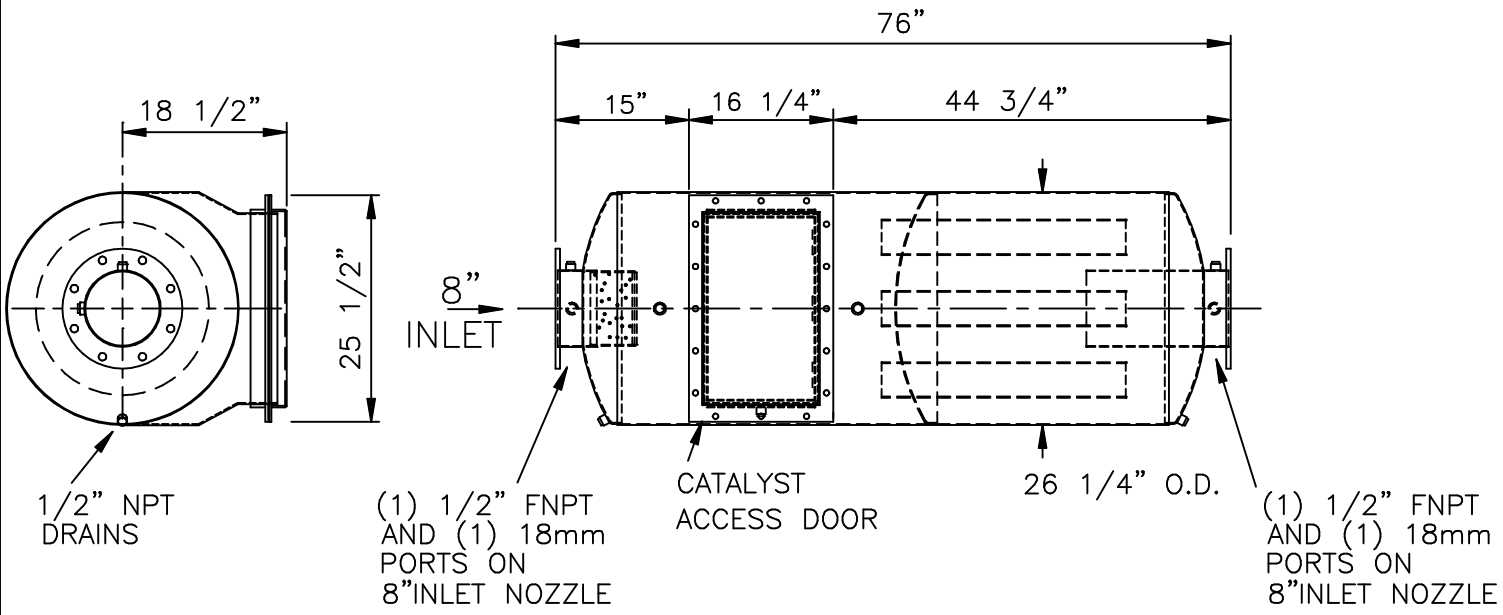

SERVICE: CATALYTIC EXHAUST SILENCER FOR WAUKESHA L7040G ENGINE

OCTAVE BAND	63	125	250	500	1K	2K	4K	8K
INSERTION LOSS	15	27	30	30	25	25	25	25

PRESSURE DROP: (WITH ONE 19.5" O.D. CATALYST PANEL)
10" H2O AT 3250 CFM, 1100 °F

DESTRUCTION EFFICIENCY: (WITH ONE 19.5" O.D.CATALYST PANEL)

87% NOX, 75% CO, 41% NMNEHC, 75% CH2O

MATERIALS OF CONSTRUCTION:

SHELL: 10 GA AND 12 GA CARBON STEEL
HEADS: 10 GA CARBON STEEL
CATALYST PANELS: (1) OR (2) 3.5" THICK x 19.5" DIAMETER 304SS
FLANGES: 1/2" CARBON STEEL

EXTERNAL PAINT: HIGH TEMP BLACK

WEIGHT: 520 LBS.

CERTIFICATION

CUSTOMER: .
CUSTOMER P.O. NO.: .

DATE: . BY: .

No.	REVISIONS	BY	DATE

MAXIM SILENCERS

10635 BRIGHTON LANE
STAFFORD, TX. 77477
PHONE (832) 554-0980
FAX (832) 554-0990

EAC3-39-8 CATALYTIC EXHAUST SILENCER

DRAWN	TJW	7/17/06	ORDER NO.	DRAWING NO.	REV
CHECKED			·	150-8A12079	·
APPROVED	TJW	7/17/06	SHEET		