20" INLET FLANGE
5/8" PLATE, 27 1/2" O.D.
(20) 1 1/4" DIA. HOLES
ON 25" B.C. STRADDLE C.L.

20" OUTLET FLANGE
5/8" PLATE, 27 1/2" O.D.
(20) 1 1/4" DIA. HOLES
ON 25" B.C. STRADDLE C.L.

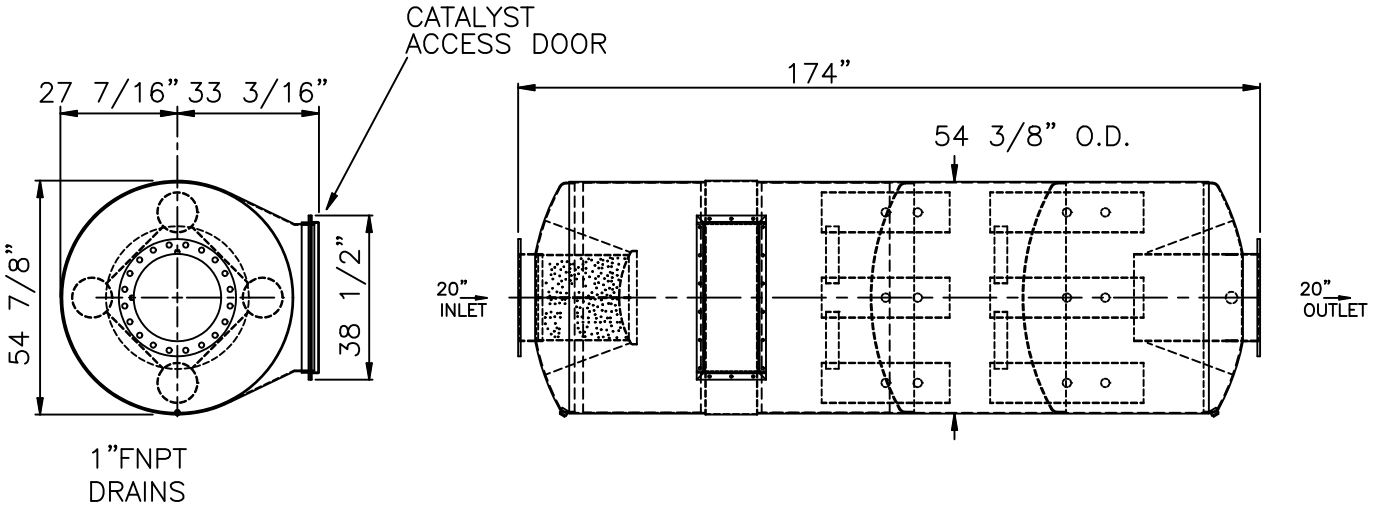

SERVICE: CATALYST EXHAUST SILENCER FOR RECIPROCATING ENGINE

OCTAVE BAND	63	125	250	500	1K	2K	4K	8K
INSERTION LOSS	20	30	35	35	30	30	30	25

PRESSURE DROP: (5.5)*(VELOCITY HEAD IN 20") + CATALYST PANEL PRESSURE DROP

CATALYST DESTRUCTION EFFICIENCY: (SEE CATALYST PERFORMANCE SHEET)

MATERIALS OF CONSTRUCTION:
SHELL: 3/16" CARBON STEEL WITH 16 GA INTERNAL LAMINATIONS
CATALYST HOUSE: 10 GA CARBON STEEL
HEADS: 1/4" CARBON STEEL
CATALYST PANELS: (1) OR (2) 3.5" THICK x 33.5" DIAMETER 304SS
FLANGES: 5/8" CARBON STEEL
INLET AND OUTLET NOZZLES: 0.1875" CARBON STEEL
INLET DIFFUSER: 10 GA CARBON STEEL

EXTERNAL PAINT: HIGH TEMP BLACK

WEIGHT:
WITH ONE PANEL: 3600 LBS
WITH TWO PANELS: 3700 LBS

CERTIFICATION

CUSTOMER: .
CUSTOMER P.O. NO.: .

DATE: . BY: .

No.	REVISIONS	APPR.

MAXIM SILENCERS

10635 BRIGHTON LANE
STAFFORD, TX. 77477
PHONE (832) 554-0980
FAX (832) 554-0990

EAC4-67-20 CATALYTIC EXHAUST SILENCER

DRAWN	TJW	8/16/07	ORDER NO.	DRAWING NO.	REV
CHECKED			.	EAC4-67-20_8-16-07	
APPROVED	TJW	8/16/07			