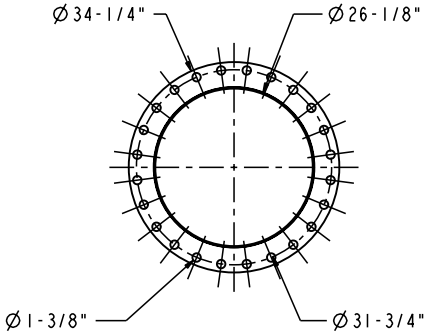

INLET

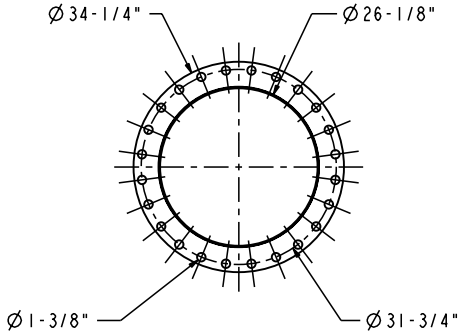

OUTLET

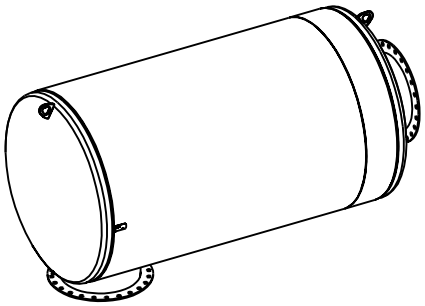

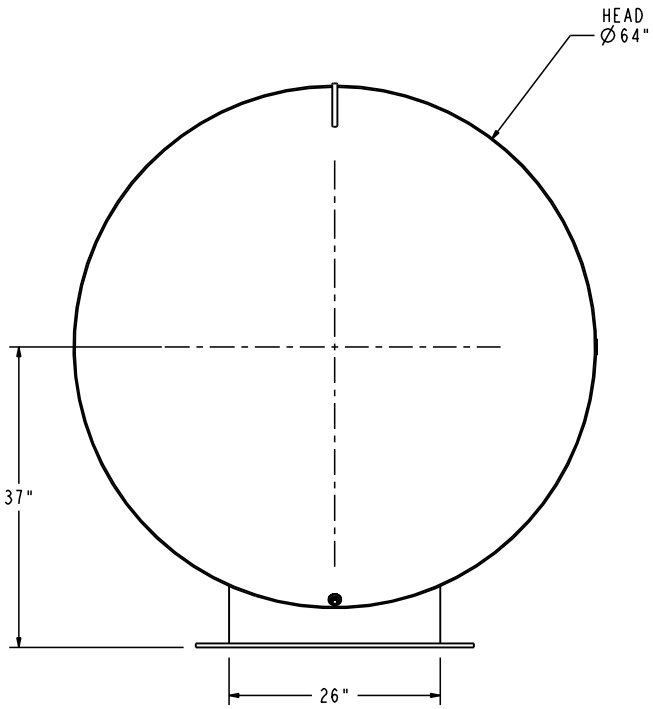

VIEW FROM INLET END

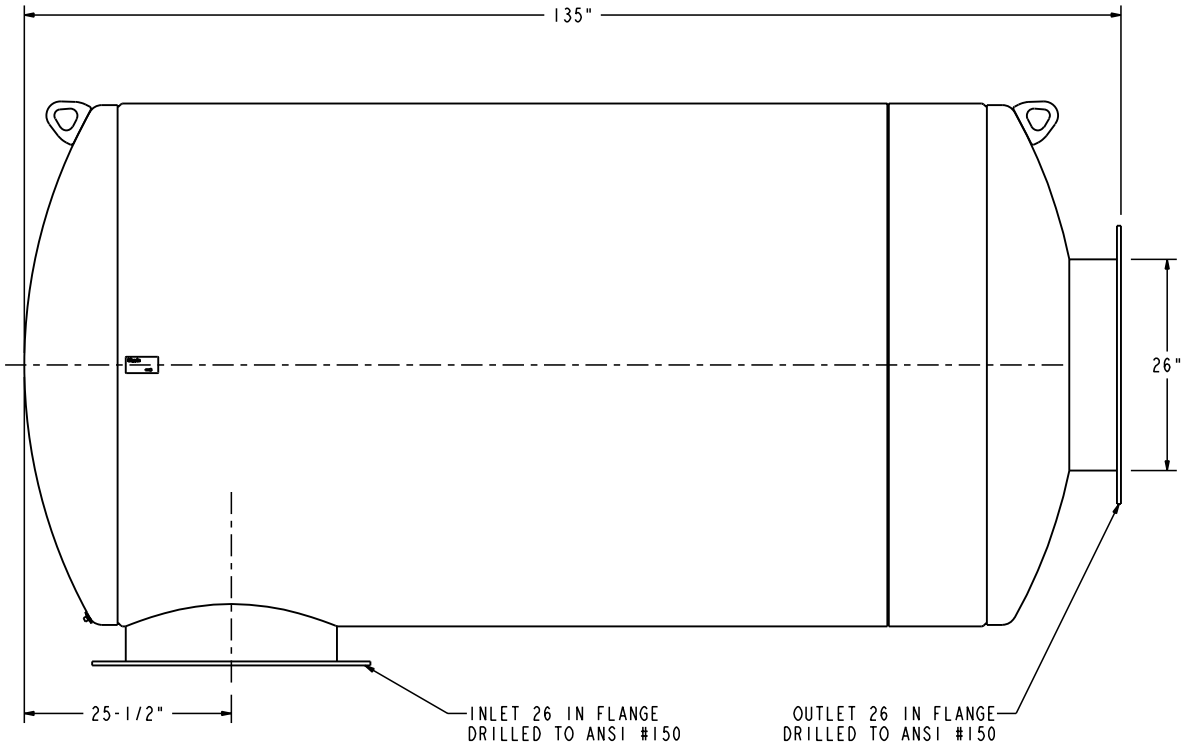

NOTES:

1. MATERIAL CARBON STEEL.
2. SILENCER IS DESIGNED TO SUPPORT OWN WEIGHT ONLY.
3. STANDARD MAXIM CONSTRUCTION TOLERANCE APPLY (±1/4").
4. ALL WELDED CONSTRUCTION.
5. DRAWING SUBJECT TO CHANGE WITHOUT NOTICE.

ALL DIMENSIONS IN INCHES UNLESS OTHERWISE SPECIFIED. TOLERANCES APPLY ON CRITICAL DIMENSION(S) AS SHOWN BELOW: ±1/8" IMP FRAC; ±0.125 IMP DEC ±3.175 MM METRIC; ±2° ANGULAR	DRAWING TYPE: SALES		MAXIM® SILENCERS
	DRAWN BY: TF	DATE: 07/29/09	Maxim Silencers, Inc. 10635 Brighton Lane Stafford, TX. 77477 PH (832) 554-0980 FX (832) 554-0990 www.Maximsilencers.com
DIM HOLD - CRITICAL DIMENSION	APPROVED BY:	DATE:	TITLE: SILENCER RESIDENTIAL GRADE 26 M22 C SI .
THE INFORMATION HEREIN IS THE PROPERTY OF MAXIM SILENCERS INC. TRANSMITTAL TO OTHERS OR USE EXCEPT THAT FOR WHICH IT IS PROVIDED IS STRICTLY PROHIBITED. DO NOT SCALE DRAWING.	REF #: 1	EST. WEIGHT: 2480 LBS	DRAWING NO.: M22-26C2 — REV: 00
THIRD ANGLE PROJECTION	ORDER:	SHIP DATE:	PROJECT/SALES ORDER NO.: — EXTERNAL FINISH: HT BLACK PAINT — SHEET: 1 OF 1