INLET FLANGE:
1/2"PLATE, 16" 150# DRILLING
23 1/2" O.D. WITH (16) 1 1/8" ø
HOLES ON 21 1/4"B.C.,
STRADDLE C.L.

OUTLET FLANGE:
1/2"PLATE, 16" 150# DRILLING
23 1/2" O.D. WITH (16) 1 1/8" ø
HOLES ON 21 1/4"B.C.,
STRADDLE C.L.

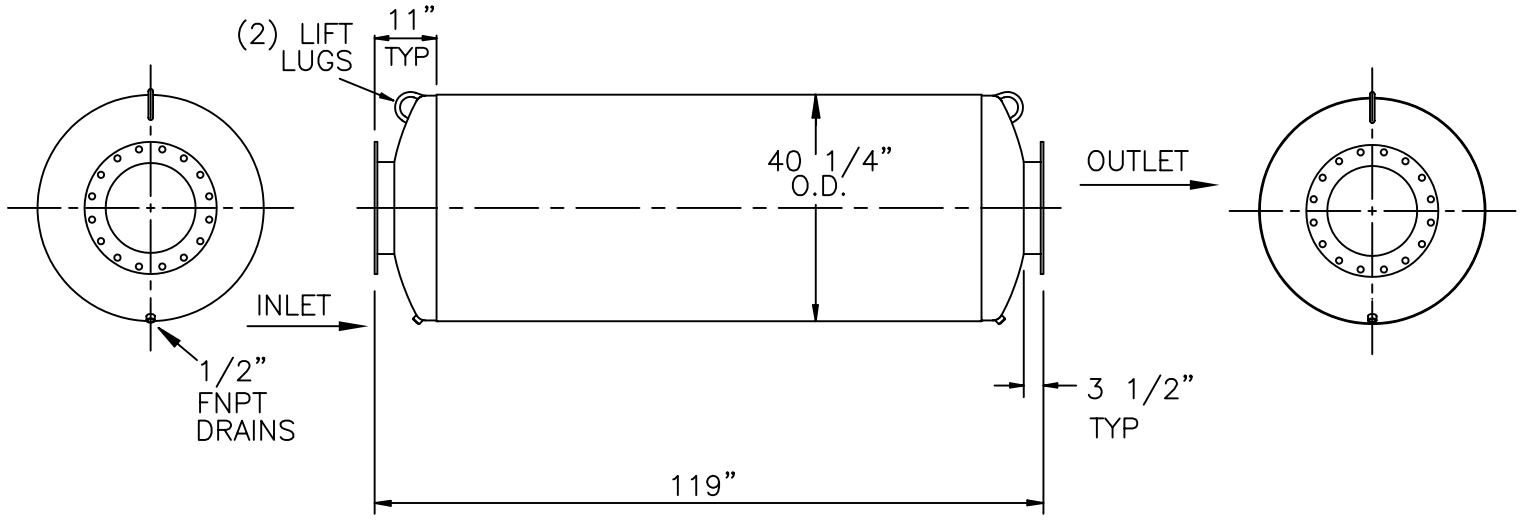

INLET END VIEW SIDE VIEW OUTLET END VIEW

SERVICE: EXHAUST SILENCER FOR RECIPROCATING ENGINE.

OCTAVE BAND	63	125	250	500	1k	2k	4k	8k
ATTENUATION, dB	20	30	29	24	20	19	20	20

SILENCER PRESSURE DROP: (4)*(Velocity Head In 16" I.D. Duct)

MATERIALS OF CONSTRUCTION: CARBON STEEL
SHELL : 10 GA CARBON STEEL
HEADS AND BAFFLE : 1/4" CARBON STEEL

EXTERNAL PAINT: FLAT BLACK, HIGH TEMPERATURE

WEIGHT: 1340 LBS

CERTIFICATION

CUSTOMER: _____

CUSTOMER P.O. NO.: _____

DATE: _____ BY: _____

MAXIM SILENCERS

10635 BRIGHTON LANE
STAFFORD, TX 77477
PHONE (832) 554-0980
FAX (832) 554-09903

16"M31 EXHAUST SILENCER

No.	REVISIONS	APPR.

DRAWN	TJW	8/12/02	ORDER NO.	DRAWING NO.	REV
CHECKED	TL	8/12/02		STD_16M31	
APPROVED	TJW	8/12/02			