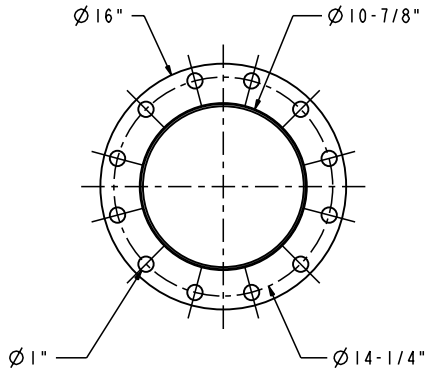


INLET

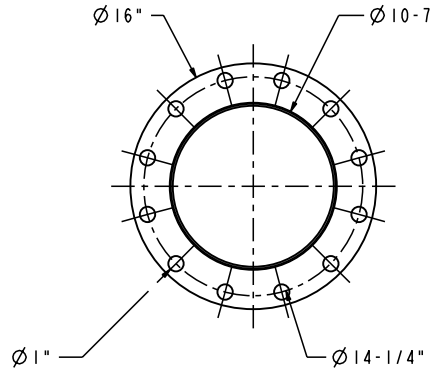


OUTLET

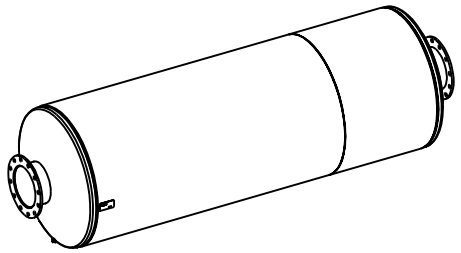

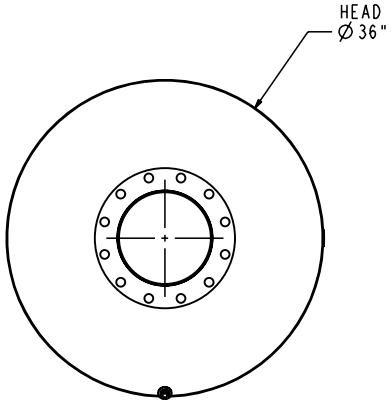


VIEW FROM INLET END

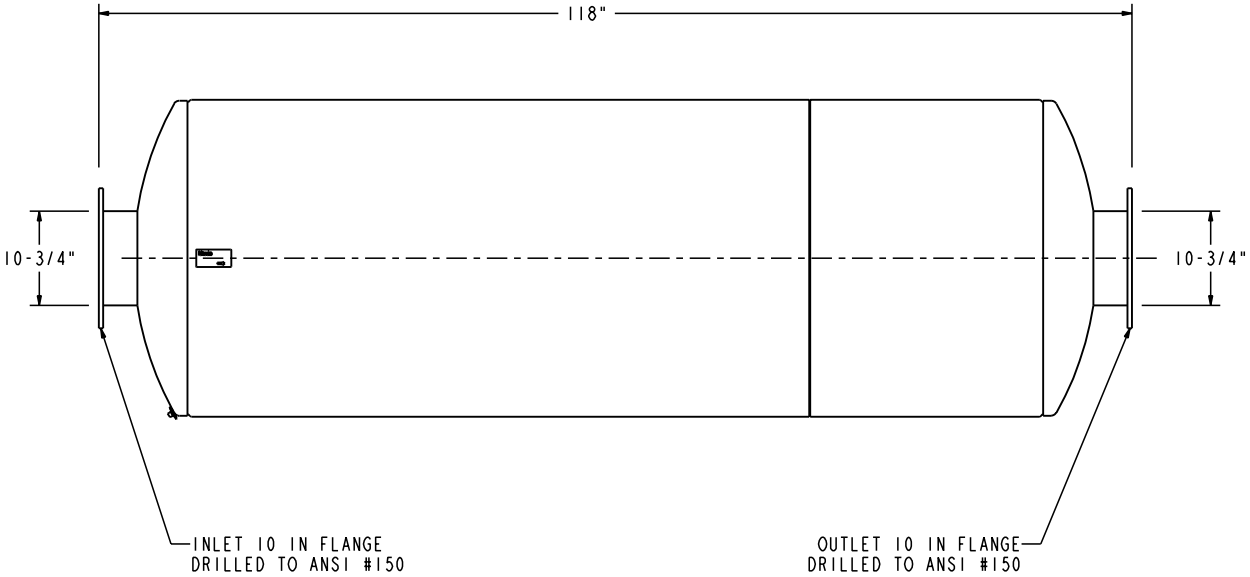


NOTES:

1. MATERIAL CARBON STEEL.
2. SILENCER IS DESIGNED TO SUPPORT OWN WEIGHT ONLY.
3. STANDARD MAXIM CONSTRUCTION TOLERANCE APPLY (±1/4").
4. ALL WELDED CONSTRUCTION.
5. DRAWING SUBJECT TO CHANGE WITHOUT NOTICE.

| | | | |
|---|---|---|---|
| ALL DIMENSIONS IN INCHES UNLESS OTHERWISE SPECIFIED.<br>TOLERANCES APPLY ON CRITICAL DIMENSION(S) AS SHOWN BELOW:<br>±1/8" IMP FRAC; ±0.125 IMP DEC<br>±3.175 MM METRIC; ±2° ANGULAR | DRAWING TYPE: SALES | | MAXIM® SILENCERS<br>Maxim Silencers, Inc.<br>10635 Brighton Lane<br>Stafford, TX. 77477<br>PH (832) 554-0980<br>FX (832) 554-0990<br>www.Maximsilencers.com |
| | DRAWN BY: TF | DATE: 07/16/09 | |
| DIM HOLD - CRITICAL DIMENSION | APPROVED BY: | DATE: | TITLE: SILENCER HOSPITAL GRADE<br>10 M52 C ST<br>. |
| THE INFORMATION HEREIN IS THE PROPERTY OF MAXIM SILENCERS INC. TRANSMITTAL TO OTHERS OR USE EXCEPT THAT FOR WHICH IT IS PROVIDED IS STRICTLY PROHIBITED. DO NOT SCALE DRAWING. | REF #: 1 | EST. WEIGHT: 783 LBS | DRAWING NO.: M52-10C1 / REV: 00 |
| THIRD ANGLE PROJECTION | ORDER: | SHIP DATE: | PROJECT/WORK ORDER NO.: / EXTERNAL FINISH: HT BLACK PAINT / SHEET: 1 OF 1 |