12"INLET&OUTLET FLANGES
1/2"PLATE,19" O.D.
(12) 1"øHOLES ON 17"B.C.
STRADDLE VERTICAL CENTERLINE

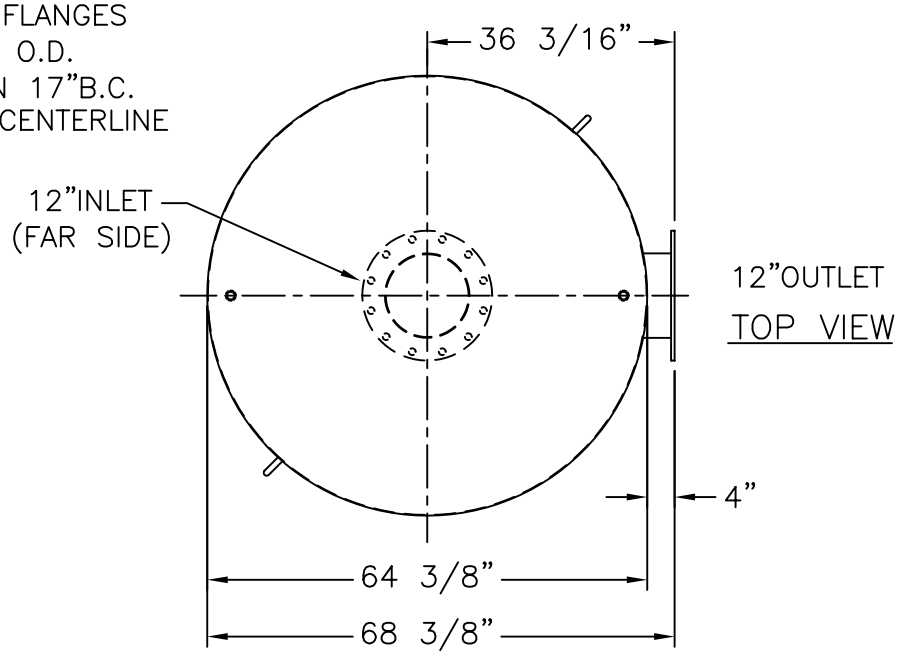

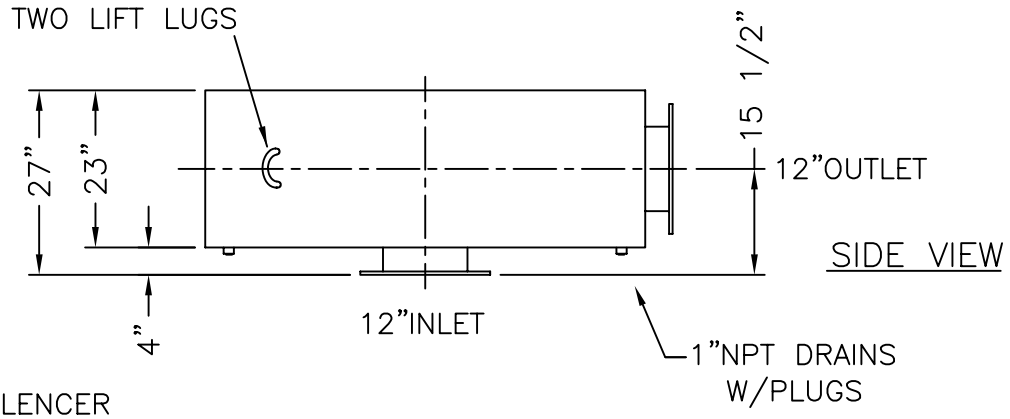

SERVICE:
ENGINE EXHAUST SILENCER

SILENCER OVERALL NOISE REDUCTION: 33 – 37 dBA

OCTAVE BAND:	63	125	250	500	1k	2k	4k	8k
TYPICAL ATTENUATION, dB:	20	30	35	37	37	37	35	35

PRESSURE DROP:
(4.0)*(VELOCITY HEAD IN 12")

MATERIALS OF CONSTRUCTION:
SHELL: 12 GA CARBON STEEL
HEADS: 10 GA CARBON STEEL
PERFO: 12 GA CARBON STEEL
PACKING: FIBERGLASS

EXTERNAL PAINT: HIGH TEMP BLACK

WEIGHT: 1010 LBS.

CERTIFICATION

CUSTOMER: WALDECK&COMPANY INC.
CUSTOMER P.O. NO.: 13033
DATE: 3/18/05 BY: DALE GAMBLE

No.	REVISIONS	APPR.

MAXIM SILENCERS

10635 BRIGHTON LANE
STAFFORD, TEXAS 77477
PHONE (832) 554-0980
FAX (832) 554-0990

12"MD36 COMPACT EXHAUST SILENCER

DRAWN	DG	3/17/05	ORDER NO.	DRAWING NO.	REV
CHECKED	TJW	3/18/05	200257-01	STD_12MD36	
APPROVED	JJ	3/18/05		Sheet 1 of 1	