INLET AND OUTLET:
2 1/2" MNPT

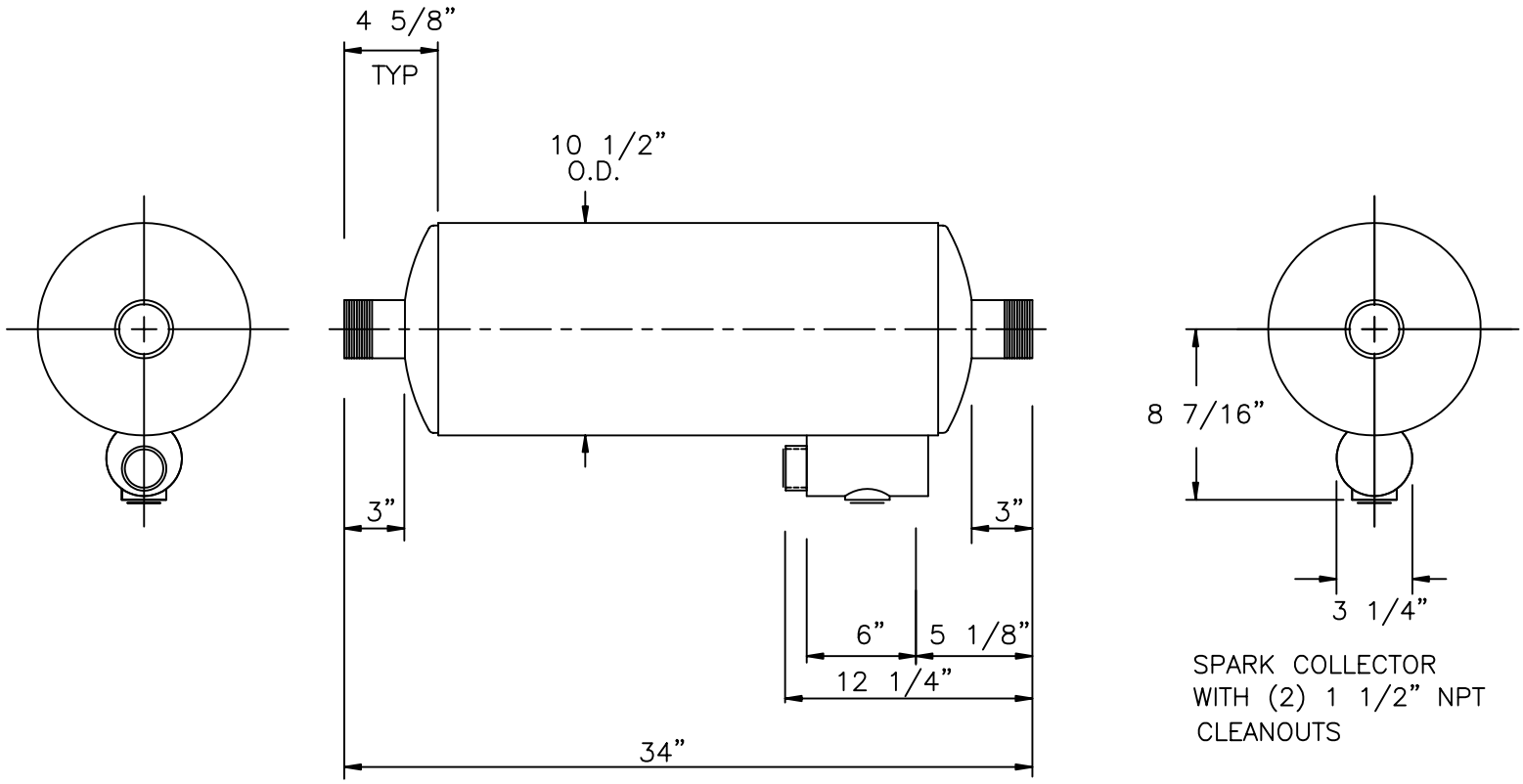

SERVICE: SPARK ARRESTING EXHAUST SILENCER FOR RECIPROCATING ENGINE

OCTAVE BAND	63	125	250	500	1K	2K	4K	8K
INSERTION LOSS	6	20	28	28	25	19	19	20

SILENCER PRESSURE DROP: (4.0)*(Velocity Head In 2 1/2" I.D. Duct)

MATERIALS OF CONSTRUCTION : CARBON STEEL
SHELL: 16 GAGE (0.065")
HEADS AND BAFFLES: 14 GAGE (0.075"), F&D
INLET AND OUTLET: 2 1/2" SCH 40, MNPT

EXTERNAL PAINT : FLAT BLACK, HIGH TEMPERATURE

WEIGHT: 36 LBS

CERTIFICATION

CUSTOMER: _____

CUSTOMER P.O. NO.: _____

DATE: _____ BY: _____

No.	REVISIONS	APPR.

MAXIM SILENCERS

10635 BRIGHTON LANE
STAFFORD, TX 77477
PHONE (832) 554-0980
FAX (832) 554-0990

2 1/2"MSA2 SPARK ARRESTING EXHAUST SILENCER

DRAWN	TJW	8/8/01	ORDER NO.	DRAWING NO.	REV
CHECKED				STD2.5MSA2	
APPROVED				Sheet 1 of 1	