INLET AND OUTLET:
3" MNPT

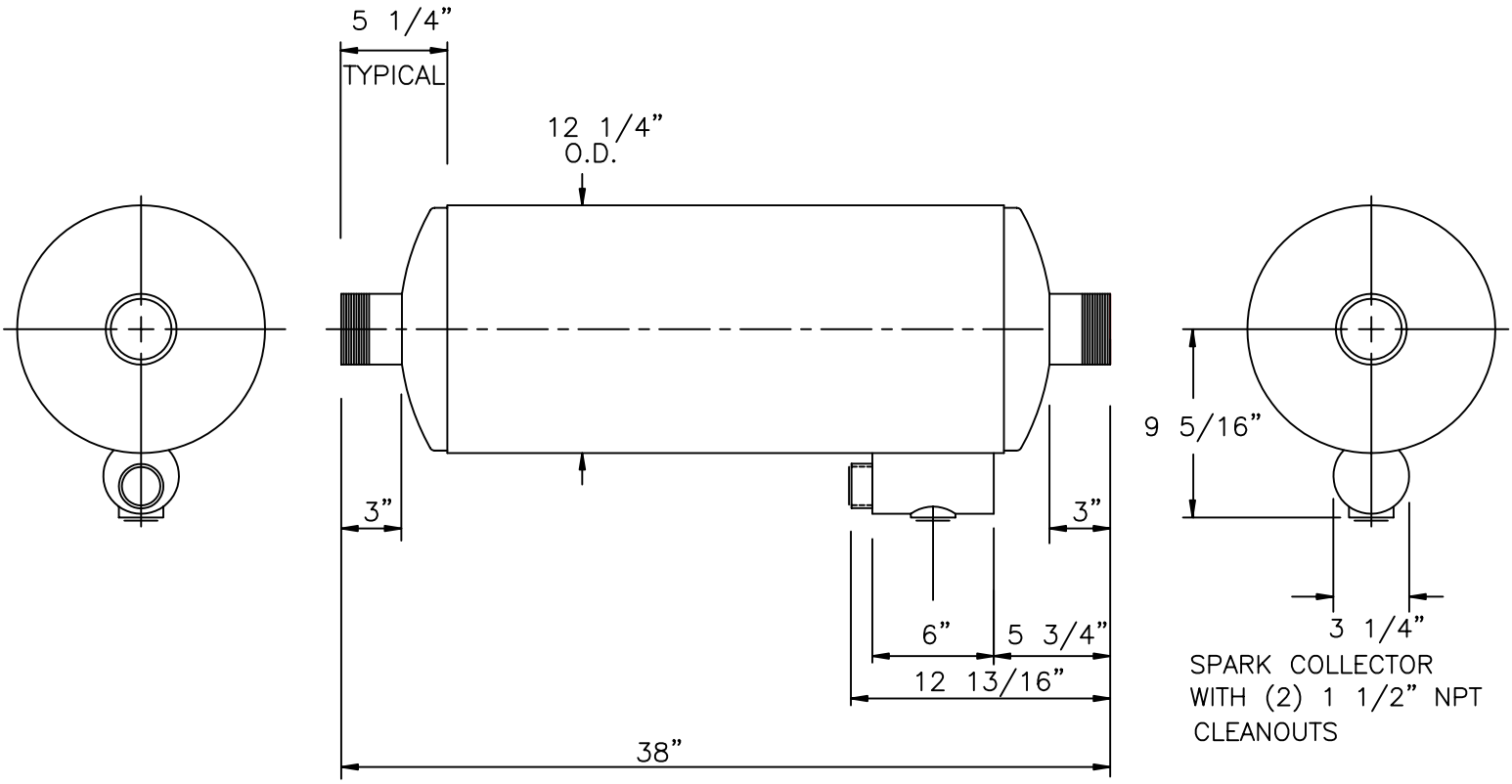

SERVICE: SPARK ARRESTING EXHAUST SILENCER FOR RECIPROCATING ENGINE

OCTAVE BAND	63	125	250	500	1K	2K	4K	8K
INSERTION LOSS	6	20	28	28	25	19	19	20

SILENCER PRESSURE DROP: (4.0)*(Velocity Head In 3" I.D. Duct)

MATERIALS OF CONSTRUCTION : CARBON STEEL
SHELL: 16 GAGE
HEADS AND BAFFLES: 14 GAGE, F&D
INLET AND OUTLET: 3" SCH 40, MNPT

EXTERNAL PAINT: FLAT BLACK, HIGH TEMPERATURE

WEIGHT: 48 LBS

CERTIFICATION

CUSTOMER: _____
CUSTOMER P.O. NO.: _____
_____
DATE: _____ BY: _____

No.	REVISIONS	APPR.

MAXIM SILENCERS

10635 BRIGHTON LANE
STAFFORD, TX 77477
PHONE (832) 554-0980
FAX (832) 554-0990

3"MSA2 SPARK ARRESTING EXHAUST SILENCER

DRAWN	TJW	8/2/01	ORDER NO.	DRAWING NO.	REV
CHECKED				STD3MSA2	
APPROVED				Sheet 1 of 1	