INLET AND OUTLET FLANGES:
1/2" PLATE, 4" 150# DRILLING
9" O.D. WITH (8) 3/4"ø
HOLES ON 7 1/2" B.C.,
STRADDLE C.L.

12" DIA.OUTLET
(TUBE IS 18.56" LONG)

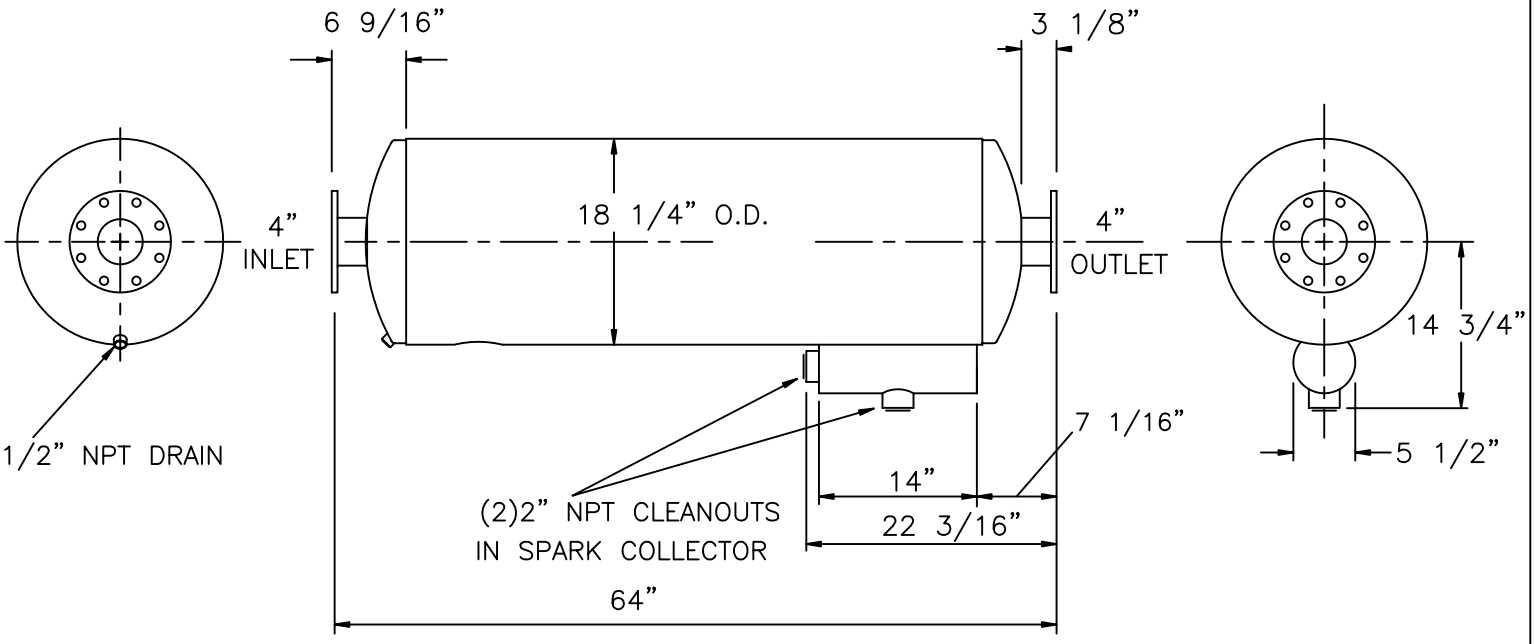

SERVICE : SPARK ARRESTING EXHAUST SILENCER FOR RECIPROCATING ENGINE

OCTAVE BAND	63	125	250	500	1K	2K	4K	8K
INSERTION LOSS	18	27	35	35	30	28	28	28

SILENCER PRESSURE DROP: (6.0)(Velocity Head in 4" Duct)

MATERIALS OF CONSTRUCTION: CARBON STEEL
SHELL: DOUBLE WRAP 16 GAGE
HEADS AND BAFFLES: 12 GAGE, F&D
FLANGES: 1/2" PLATE

EXTERNAL PAINT : FLAT BLACK, HIGH TEMPERATURE

WEIGHT: 220 LBS

CERTIFICATION

CUSTOMER: _____

CUSTOMER P.O. NO.: _____

DATE: _____ BY: _____

No.	REVISIONS	APPR.

MAXIM SILENCERS

10635 BRIGHTON LANE
STAFFORD, TX 77477
PHONE (832) 554-0980
FAX (832) 554-0990

4"MSA4 SPARK ARRESTING EXHAUST SILENCER

DRAWN	TJW	10/12/01	ORDER NO.	DRAWING NO.	REV
CHECKED				STD4MSA4	
APPROVED				Sheet 1 of 1	