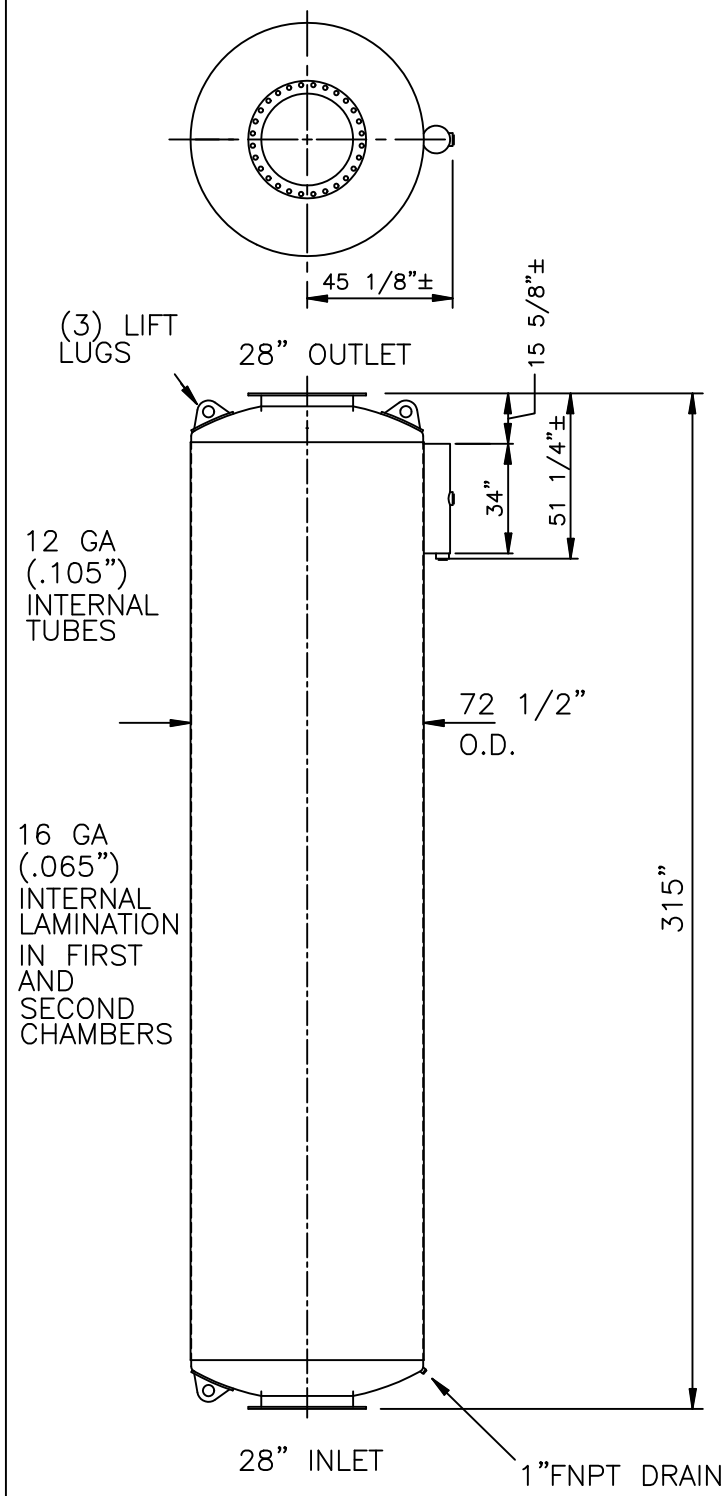

28" OUTLET FLANGE
5/8"PLATE, 36 1/2"O.D.
(28)1 3/8" DIA HOLES
ON 34" B.C., STRADDLE C.L.

NOTES:

1. SERVICE: EXHAUST SILENCER FOR RECIPROCATING ENGINE
2. NOISE REDUCTION :

OCTAVE BAND	63	125	250	500	1K	2K	4K	8K
ATTENUATION	30	35	35	30	28	28	28	29

3. SILENCER PRESSURE DROP: (6.0)*(Velocity Head 28)
4. MATERIALS OF CONSTRUCTION :
   SHELL: 3/16" CARBON STEEL WITH 16 GA INTERNAL LAMINATIONS
   HEADS AND BAFFLES : 1/4" CARBON STEEL
   INLET/OUTLET TUBES: 3/16" CARBON STEEL
   INTERNAL TUBES: 12 GA CARBON STEEL
   FLANGES: 5/8" CARBON STEEL PLATE
5. EXTERNAL PAINT: HIGH TEMPERATURE BLACK
6. WEIGHT: 7560 LBS

28" INLET FLANGE
5/8"PLATE, 36 1/2"O.D.
(28)1 3/8" DIA HOLES
ON 34" B.C., STRADDLE C.L.

CERTIFICATION

CUSTOMER: .

CUSTOMER P.O. NO.: .

DATE: . BY: .

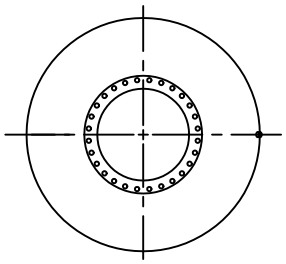

INLET END VIEW

MAXIM SILENCERS

10635 BRIGHTON LANE
STAFFORD, TX. 77477
PHONE (832) 554-0980
FAX (832) 554-0990

28"MSA-4 SPARK ARRESTING EXHAUST SILENCER

No.	REVISIONS	APPR.						
			DRAWN	TJW	11/4/05	ORDER NO.	DRAWING NO.	REV
			CHECKED			·	STD_28MSA4	
			APPROVED	TJW	11/4/05	SHEET		